MILTON ROY

The Inventor of Metering Pump

PRIMEROYAL® L

MEETS API 675

PRIMEROYAL®L

Technical Specifications

- Flow rate for simplex head up to 4410 LPH
- Maximum discharge pressure up to 500 bar
- Turndown ratio 10:1,steady state accuracy ±1%
- Maximum temperature of pumped fluid up to 315˚C
- Meets API 675 standard

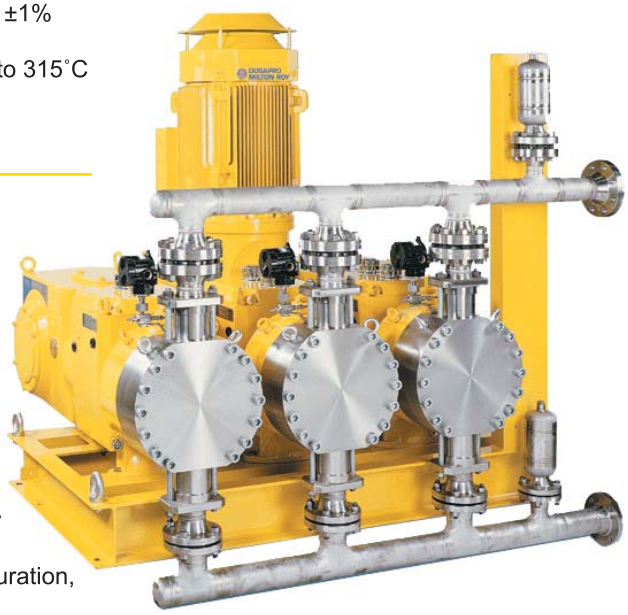

Features

Driver Units

- Compact and rugged structure for durability
- Modular design provides flexibility in configuration, upgrades and simplify maintenance
- Variable eccentric drive design generates lower pulsation
- Oil bath lubrication for all drive components
- Multiplex head with separate flow adjustment available
- Accurate adjustment of flow rate from 0-100%, while pump is running or stopped
- Manual stroke adjustment standard, electronic or variable speed optional

Liquid End

- Various liquid ends including HPD, metallic diaphragm and packed plunger
- Special liquid ends such as heating jacket are available
- Optional diaphragm rupture detection system (local/remote), pressure or electrolyte type
- Special options for head, valve, diaphragm, plunger etc available
- High precision suction/discharge check valve, special configuration / material optional

PUMP CODE

BASIC CODE[1]

Series Type	SPM	Motor Power	Plunger Diameter	Liquid End	Operating Pressure	
P L						/

OPTION CODE[2]

Adjustment	Special Motor	LE Version	LE Material	Plunger or Dia-phragm Material	Gland Packing or Detection	Valve	Connections	Other Option

BASIC CODE

Strock Speed: SPM@rpm

Code →	064	080	096	120	149	180
Description	64@1000	80@1000	96@1500	120@1500	149@1500	180@1500

Motor Power: KW

Code →	J	K	L	M	P	Q	T	S	R
Description	0.75	1.1	1.5	2.2	3.0	4.0	5.5	Pump without motor	Driven
	IEC80	IEC90	IEC90	IEC100	IEC100	IEC112	IEC132		N/A

Plunger Diameter

Code →		010	012	014	016	018	020	022	025	032	040	050	063	070	080	090	100	115
Φmm		10	12	14	16	18	20	22	25	32	40	50	63	70	80	90	100	115
N	Q@	- -	- -	- -	71	- -	119	- -	195	331	526	830	1328	- -	2150	- -	3370	- -
	P_{max}	- -	- -	- -	439	- -	290	- -	178	107	68	43	26	- -	16	- -	10	- -
H	Q@	- -	- -	- -	- -	- -	81	- -	157	292	487	792	1289	1604	2113	2685	3335	4410
	P_{max}	- -	- -	- -	- -	- -	286	- -	183	111	71	45	28	23	17	14	11	8
P	Q@	- -	- -	- -	- -	- -	- -	- -	- -	- -	- -	833	1323	1634	2134	2175	2686	3561
	P_{max}	- -	- -	- -	- -	- -	- -	- -	- -	- -	- -	10	10	10	10	10	10	8
M	Q[3]@	27	39	53	73	100	130	162	- -	- -	- -	- -	- -	- -	- -	- -	- -	- -
	P[3] max	500	500	500	447	353	286	236	- -	- -	- -	- -	- -	- -	- -	- -	- -	- -

Liquid End

Code	Description
N	Packed plunger.
H	HPD and metallic LE.
P	HPD and plastic LE.
M	Metallic diaphragm and metallic LE.

Operating Pressure

Code	*Specify operating pressure(Bar)*

Plunger Material

Code	Description
Z0	316 S.S chromium oxyde coated
ZX	To be specified

or Diaphragm Material

Code	Description
PV	PTFE / Viton
PT	PTFE

Gland Packing

Code	Description
S.	Single gland packing to be specified.
D.	Double gland packing.
R.	Single packing with cleaning ring
.4	PTFE + fiber
.5	Mixed Y4 + Y7 + intercalary ring
.7	PTFE=standard

or Diaphragm Detection

Code	Description
L0	Without detection
L2	By resistivity
L4	Alarm by electrical density variation
L7	Alarm type "L4" + intrinsic safety
L8	Alarm type "L2" + intrinsic safety
C5	By pressure gauge
C6	By pressure switch
C7	By manometer with electric detection
C8	By Ex-proof pressure switch
CZ	BSpecial - To be specified

OPTION CODE

Adjustment

Code	Description
ST	STEGMANN electronic servo-motor
E	ECC waterproof servomotor 1 Phase
EN	Servo-motor ECC ex-proof 1 Phase

Special Motor

Code	Description
1	Asynchronus Ex-proof motor
3	Non sparking
4	Without control box
7	With control box
9	Special to be specified

Liquid End Version

Code	Description
A	Food grade
D	Descaling / Passivated
J	Heating or cooling jacket

Liquid End Material

Code	Description
11	316 L : Standard
71	PVC : Standard code P
00	Others

Valve Cartridges

Code	Description
	316L S.S.
NS	Simple bille / Single ball
ND	Double bille / Double ball
LS	"Hardener" Single ball
LD	"Hardener" Double ball
	Slurries
KS	Single ball
KD	Double ball
	H_2SO_4
HS	Single ball
HD	Double ball
	Viscous liquid
VS	Assisted single ball
	Anti-siphonning
SS	Disch. Double ball + spring
	Passivated
DS	Single ball
DD	Double ball
	Food grade
AS	Single ball
AD	Double ball

Connections

Code	Description	
	Suction	***Discharge***
VV..	Vertical	Vertical
HH..	Horizontal	Horizontal
VH..	Vertical	Horizontal
HV..	Horizontal	Vertical
..1f	Gas female	
..1m	Gas male	
..2f	NPT Female	
..2m	NPT male	
..3	Welding flanges	

Other Option

Code	Z	Other technical specification

(1) Basic Codes must be filled completely; (2) Option Codes be selected per requirements; (3) These datas are base one single metal diaphragm LE.

LIQUID END PERFORMANCE

Plunger Dia. Swept Volume Liquid End→	SPM @1000 RPM	SPM @1500 RPM	Maximum Capacity (LPH) LPH @ 10BAR M Single	LPH @ 10BAR M Double	LPH @ Pmax M Single	LPH @ Pmax M Double	Maximum Discharge Pressure (Bar) 'Bar@ 0.75kW M Single	'Bar@ 0.75kW M Double	'Bar@1.1kW M Single	'Bar@1.1kW M Double	'Bar@1.5kW M Single	'Bar@1.5kW M Double	'Bar@2.2kW M Single	'Bar@2.2kW M Double	'Bar@3kW M Single	'Bar@3kW M Double	'Bar@4kW M Single	'Bar@4kW M Double	'Bar@5.5kW M Single	'Bar@5.5kW M Double	Connection Size(std)
	64		13	13	9	8	500	350													
Φ10mm	80		17	17	12	11	419	350	500	350											
		96	20	20	14	13	349	349	500	350											1/2"
Vs:3.9 cm³		120	26	26	18	17	279	279	428	350	500	350									VV1 m
		149	32	32	22	21	225	225	344	344	481	350	500	350							
		180	39	39	27	25	186	186	285	285	398	350	500	350							
	64		19	19	13	12	364	350	500	350											
Φ12mm	80		24	24	16	15	291	291	445	350	500	350									
		96	29	29	20	19	243	243	371	350	500	350									1/2"
Vs:5.7 cm³		120	37	37	26	24	194	194	297	297	414	350	500	350							VV1 m
		149	46	46	32	30	156	156	239	239	334	334	499	350	500	350					
		180	56	56	39	36	129	129	198	198	276	276	413	350	500	350					
	64		27	27	19	17	267	267	409	350	500	350									
Φ14mm	80		33	33	23	21	214	214	327	327	457	350	500	350							
		96	40	40	28	26	178	178	273	273	381	350	500	350							1/2"
Vs: 7.7 cm³		120	50	50	35	33	142	142	218	218	304	304	456	350	500	350					VV1 m
		149	63	63	44	41	115	115	175	175	245	245	367	350	500	350					
		180	76	76	53	50	95	95	145	145	203	203	304	304	419	350	500	350			
	64		35	35	25	23	205	205	313	313	437	350	447	350							
Φ16mm	80		44	44	32	29	164	164	250	250	350	350	447	350							
		96	53	53	39	34	136	136	209	209	291	291	436	350	447	350					1/2"
Vs: 10.1 cm³		120	66	66	48	43	109	109	167	167	233	233	349	349	447	350					VV1 m
		149	82	82	60	54	88	88	134	134	187	187	281	281	387	350	447	350			
		180	99	99	73	65	72	72	111	111	155	155	232	232	321	321	431	350	447	350	
	64		44	44	34	29	162	162	247	247	345	345	353	350							
Φ18mm	80		56	56	44	36	129	129	198	198	276	276	353	350							
		96	67	67	53	44	108	108	165	165	230	230	344	344	353	350					"1
Vs: 12.7 cm³		120	84	84	66	55	86	86	132	132	184	184	275	275	353	350					VV1 m
		149	104	104	82	68	69	69	106	106	148	148	222	222	306	306	353	350			
		180	126	126	100	83	57	57	88	88	122	122	183	183	253	253	340	340	353	350	
	64		55	55	45	39	131	131	200	200	280	280	286	286							
Φ20mm	80		69	69	57	49	104	104	160	160	224	224	286	286							
		96	83	83	69	60	87	87	133	133	186	186	279	279	286	287					1"
Vs: 15.7 cm³		120	104	104	86	75	69	69	107	107	149	149	223	223	286	286					VV1 m
		149	129	129	107	93	56	56	86	86	120	120	179	179	248	248	286	286			
		180	156	156	130	112	46	46	71	71	99	99	148	148	205	205	276	276	286	286	
	64		67	67	57	51	108	108	165	165	231	231									
Φ22mm	80		83	83	71	64	86	86	132	132	185	185	236	236							
		96	100	100	86	77	72	72	110	110	154	154	230	230							1"
Vs: 19 cm³		120	125	125	108	96	57	57	88	88	123	123	184	184	236	236					VV1 m
		149	156	156	134	120	46	46	71	71	99	99	148	148	205	205	236	236			
		180	188	188	162	145	38	38	58	58	82	82	123	123	169	169	228	228	236	236	

Liquid End→	@1000 RPM	@1500 RPM	H @ 10BAR N	LPH @ Pmax P	Bar@0.75kW N	P	Bar@1.1kW N	P	Bar@1.5kW N	P	Bar@2.2kW N	P	Bar@3kW N	P	Bar@4kW N	P	Bar@5.5kW N	P	
	64		37	-	30	-	198	-	306	-	430	-	439						
Φ16mm	80		46	-	38	-	157	-	243	-	343	-	439						
		96	55	-	45	-	129	-	202	-	284	-	429	-	439				1/2"
Vs: 10.1 cm³		120	69	-	57	-	102	-	160	-	226	-	342	-	439				VV1m
		149	86	-	71	-	81	-	127	-	181	-	274	-	380		439	-	
	64		57	-	50	-	125	-	195	-	274	-	280	-				-	
Φ20mm	80		72	-	64	-	99	-	155	-	218	-	280	-				-	1/2"
		96	86	-	76	-	81	-	128	-	181	-	273	-	280			-	VV1m
Vs: 15.7 cm³		120	108	-	96	-	64	-	101	-	143	-	217	-	280			-	
		149	134	-	119	-	50	-	80	-	114	-	174	-	242		280	-	
	64		90	-	83	-	79	-	124	-	174	-	178	-				-	
Φ25mm	80		113	-	105	-	62	-	98	-	138	-	178	-				-	
		96	135	-	125	-	51	-	81	-	115	-	174	-	178			-	1/2"
Vs: 24.5 cm³		120	169	-	157	-	40	-	64	-	91	-	138	-	178			-	VV1 m
		149	210	-	195	-	31	-	50	-	72	-	110	-	154		178	-	
	64		148	-	142	-	47	-	74	-	105	-	107	-				-	
Φ32mm	80		185	-	177	-	37	-	59	-	84	-	107	-				-	1/2"
		96	222	-	213	-	30	-	48	-	69	-	105	-	107			-	VV1 m
Vs: 40.2 cm³		120	277	-	266	-	23	-	38	-	54	-	83	-	107			-	
		149	345	-	331	-	17	-	30	-	43	-	66	-	93		107	-	
	64		231	-	225	-	30	-	47	-	67	-	68	-				-	1"(for H)
Φ40mm	80		289	-	282	-	22	-	37	-	53	-	68	-				-	1/2"(for N)
		96	347	-	338	-	17	-	30	-	43	-	67	-	68			-	VV1 m
Vs: 62.8 cm³		120	434	-	423	-	12	-	23	-	34	-	53	-	68			-	1"
		149	539	-	526	-	9	-	17	-	27	-	42	-	59		68	-	VV1f(for P)
	64		361	358	356	358	17	10	29		42		43						
Φ50mm	80		452	447	446	447	12	10	22		33		43						1"
		96	542	537	534	537	9	10	18		27		42		43				VV1 m
Vs: 98.2 cm³		120	678	671	669	671		8	13	10	20		33		43				VV1f(for P)
		149	842	833	830	833		6	9	10	15		26		37		43		
	64		574	568	570	568	9	10	17		26								
Φ63mm	80		718	710	713	710		8	12	10	19		26						1"
		96	861	852	855	852		6	9	10	15		26						VV1 m
Vs: 156 cm³		120	1077	1066	1070	1066				8	11	10	19		26				VV1f(for P)
		149	1337	1323	1328	1323				5	7	9	14	10	22		26		
	64		-	701	-	701	-	8	-	10	-		-		-		-		
Φ70mm	80		-	877	-	877	-	5	-	10	-		-		-		-		1"
		96	-	1052	-	1052	-		-	8	-	10	-		-		-		VV1 m
Vs: 192 cm³		120	-	1316	-	1316	-		-	6	-	10	-		-		-		VV1f(for P)
		149	-	1634	-	1634	-		-		-	7	-	10	-		-		
	64		926	916	923	916		5	8	10	13.892		16						1"(for H)
Φ80mm	80		1158	1146	1155	1146				7	10	10	16						1-1/2"(for N)
		96	1389	1375	1385	1375				5	7	9	13.583	10	16				VV1 m
Vs: 251 cm³		120	1737	1719	1732	1719						6	10	10	16				1"
		149	2156	2134	2150	2134							7	8	12	10	16		VV1f(for P)
	64		-	1160	-	1160	-		-	7	-	10	-		-		-		
Φ90mm	80		-	1450	-	1450	-		-	5	-	8	-	10	-		-		1-1/2"
		96	-	1740	-	1740	-		-		-	6	-	10	-		-		VV1 m
Vs: 318 cm³		120	-	2175	-	2175	-		-		-	6.4545	-	8	-	10	-		VV1f(for P)
		149	-		-		-		-		-		-		-		-		
	64		1447	1432	1447	1432				5	7	8	10	10					
Φ100mm	80		1809	1790	1809	1790						6	10	10					1-1/2"
		96	2171	2148	2171	2148							7	8	10	10			VV1 m
Vs: 393 cm³		120	2714	2686	2714	2686								6	8	10	10		VV1f(for P)
		149	3370		3370												10.053		
	64		-	1899	-	1899	-		-		-	5	-	8	-		-		
Φ115mm	80		-	2374	-	2374	-		-		-		-	7	-	8	-		1-1/2"
		96	-	2848	-	2848	-		-		-		-	5	-	8	-		VV1m
Vs: **519 cm³**		120	-	3561	-	3561	-		-		-		-		-	6	-	8	VV1f(for P)
		149	-		-		-		-		-		-		-		-		

MILTON ROY ASIA PACIFIC PTE LTD

HIGH PERFORMANCE DIAPHRAGM LIQUID END

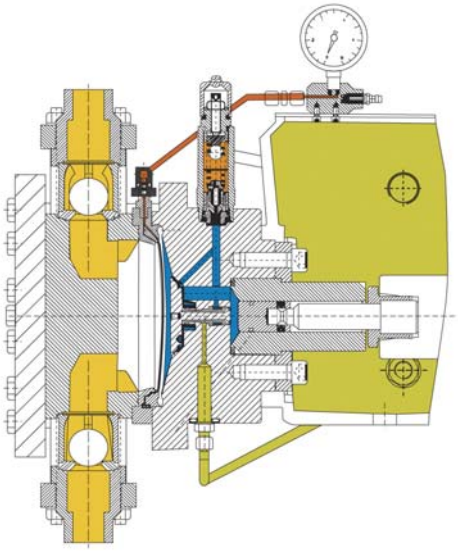

- Standard liquid end H=316SS
- Flow rate for simplex head: Up to 4410 LPH
- Pressure capability: Up to 285 bar
- Standard liquid end: P=PVC
- Flow rate for simplex head: Up to 3561 LPH
- Pressure capability: Up to 10 bar
- Internal pressure relief valve protects hydraulic system from over pressure
- ±1%Steady state accuracy over 10:1 turndown ratio
- Maximum temperature of pumped fluid: 150˚C
- Preformed PTFE/elastomer composite diaphragm with integral O rings operates by unfolding without stretching
- Adopt (Patented) MARS (Mechanically Actuated Refill System) automatic compensation valve for accuracy and reliability
- Optional diaphragm rupture detection system(local/remote), pressure or electrolyte type optional

METALLIC DIAPHRAGM LIQUID END

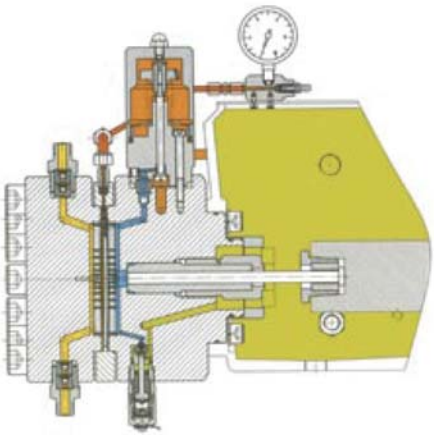

- Standard liquid end H=316SS
- Standard diaphragm material: 316L
- Flow rate for simplex head: Up to 188 LPH
- Pressure capability: Up to 500 bar
- Internal pressure relief valve protects hydraulic system from over pressure
- ±1%Steady state accuracy over 10:1 turndown ratio
- Maximum temperature of pumped fluid up to 150˚C and special design up to 300˚C
- Both simplex and double metallic diaphragm are available
- Optional diaphragm rupture detection system (local/remote), pressure or electrolyte type

PACKED PLUNGER LIQUID END

- Standard liquid end N
- Flow Rate for Simplex head: Up to 3370 LPH
- Pressure capability: Up to 439 bar
- Customized plunger material available
- Wide range of packing materials and arrangements
- Maximum temperature of pumped fluid: 315˚C
- Low NPSH requirement

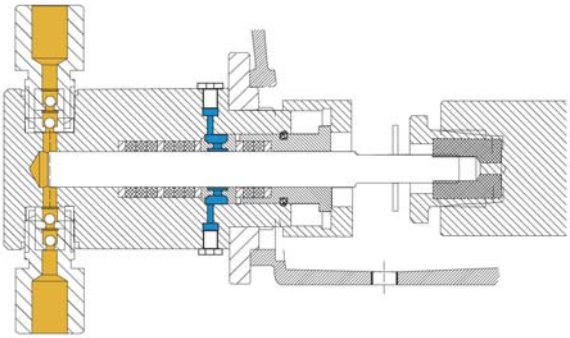

GENERAL DIMENSIONS (in mm)

The general dimensions are given as an indication only. The dimensions given correspond to the maximum dimensions (largest liquid end, most powerful motor).

- **Diaphragm liquid end simplex** configuration

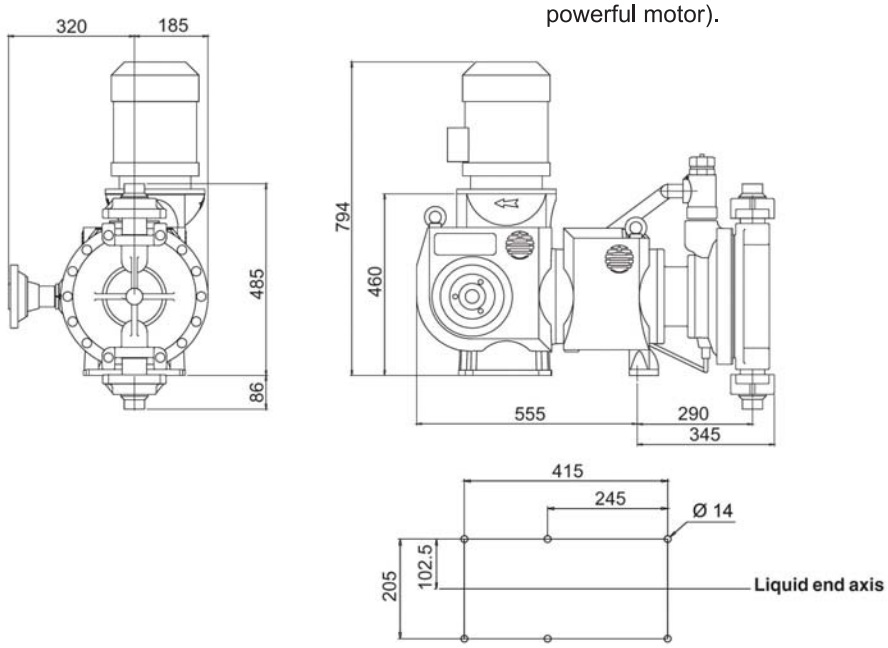

- **Diaphragm liquid end triplex** configuration

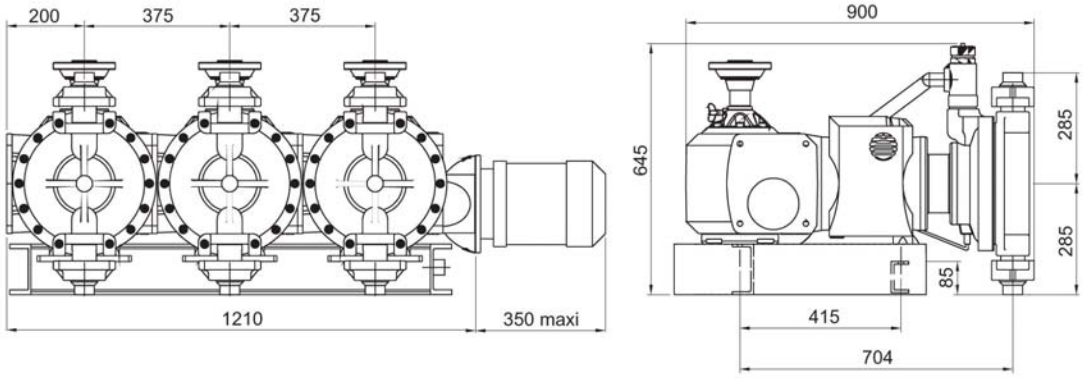

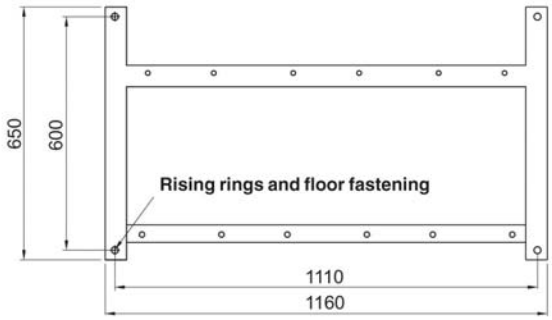

Weight and packing

Version	Net weight (*) kg	Gross weight (*) kg	Packing (mm) (L x W x H)
PRIMEROYAL® L simplex	250	370	1180 x 780 x 1250

(*) Approximately

MILTON ROY

Milton Roy Asia Pacific Regional Offices :

Singapore

23 Tagore Lane #03-06

Tagore 23 Warehouse Complex

Singapore 787601

Tel : (65) 6242 9182 Fax: (65) 6243 4249

Email : mrapsing@miltonroy.com.sg

Korea

1233, Yongbiuchunga Officetel

Naesu-Dong 75, Jongno-Gu

Seoul, Korea

Tel : 82-2-730-3510/20 Fax : 82-2-730-3515

Thailand

No. 46/63-74 Nation Tower, 14th Floor

Room A, Bangna-Trad Road, K.M. 4.5

Bangna Subdistrict Bangna District

Bangkok 10260

Thailand

Tel : 662-7514720 Fax : 662-7514720

Distributed By: